15W Speed Control Reversible Motor 15W(□70mm)

Motor Specification

Model 7SRDG□-15G: Gear Type Shaft 7SRDD□-15: D-Cut Type Shaft	Output W	Voltage V	Frequency Hz	Poles	Duty	Speed Range r/min	Starting Torque kgfcm	Starting Torque N.m	Permissible Torque 1200r/min kgfcm	Permissible Torque 1200r/min N.m	Permissible Torque 90r/min kgfcm	Permissible Torque 90r/min N.m	Capacitor μF / VAC
7SRDGA-15G	15	1ø110	60	4	30min.	90-1700	0.67	0.067	1.13	0.113	0.58	0.058	6.0 / 250
7SRDGD-15G	15	1ø220	60	4	30min.	90-1700	1.00	0.100	1.18	0.118	0.63	0.063	1.5 / 450
7SRDGE-15G	15	1ø220	50	4	30min.	90-1400	0.80	0.080	1.05	0.105	0.50	0.050	1.2 / 450
		1ø240					1.00	0.100	1.25	0.125	0.60	0.060	

1) Enter the phase & voltage code in the place * and enter the model type of attaching Gearbox in the box (□) within the motor model name.
2) All models contain a built-in thermal protector.
3) Gear Type Shaft are for attaching Gearbox and D-Cut Type Shaft are for using motor only.

Max. Permissible Torque at Output Shaft of Gearbox

Motor Model	Gearbox Model	r/min	V	Hz	Gear Ratio	3	3.6	6	7.5	9	12.5	15	18	25	30	36	50	60	75	90	100	120	150	180
7SRDG□-15G	7GBK□BMH	1200	110	60	kgfcm	2.8	3.4	5.6	7.0	8.4	11.7	14.1	16.9	21.2	25.4	27.7	38.4	46.1	50.0	50.0	50.0	50.0	50.0	50.0
					N.m	0.28	0.33	0.55	0.69	0.83	1.15	1.38	1.65	2.08	2.49	2.71	3.77	4.52	4.90	4.90	4.90	4.90	4.90	4.90
			220	60	kgfcm	2.9	3.5	5.9	7.3	8.8	12.2	14.7	17.6	22.1	26.6	28.9	40.1	48.1	50.0	50.0	50.0	50.0	50.0	50.0
					N.m	0.29	0.35	0.58	0.72	0.86	1.20	1.44	1.73	2.17	2.60	2.83	3.93	4.72	4.90	4.90	4.90	4.90	4.90	4.90
			220/240	50	kgfcm	3.1	3.7	6.2	7.8	9.3	13.0	15.6	18.7	23.4	28.1	30.6	42.5	50.0	50.0	50.0	50.0	50.0	50.0	50.0
					N.m	0.31	0.37	0.61	0.76	0.92	1.27	1.53	1.83	2.30	2.76	3.00	4.17	4.90	4.90	4.90	4.90	4.90	4.90	4.90
		90	110	60	kgfcm	1.4	1.7	2.9	3.6	4.3	6.0	7.2	8.7	10.9	13.1	14.2	19.7	23.7	29.6	35.5	39.4	47.3	50.0	50.0
					N.m	0.14	0.17	0.28	0.35	0.42	0.59	0.71	0.85	1.07	1.28	1.39	1.93	2.32	2.90	3.48	3.87	4.64	4.90	4.90
			220	60	kgfcm	1.6	1.9	3.1	3.9	4.7	6.5	7.8	9.4	11.8	14.2	15.4	21.4	25.7	32.1	38.6	42.8	50.0	50.0	50.0
					N.m	0.15	0.18	0.31	0.38	0.46	0.64	0.77	0.92	1.16	1.39	1.51	2.10	2.52	3.15	3.78	4.20	4.90	4.90	4.90
			220/240	50	kgfcm	1.5	1.8	3.0	3.7	4.5	6.2	7.5	9.0	11.3	13.5	14.7	20.4	24.5	30.6	36.7	40.8	49.0	50.0	50.0
					N.m	0.15	0.18	0.29	0.37	0.44	0.61	0.73	0.88	1.10	1.32	1.44	2.00	2.40	3.00	3.60	4.00	4.80	4.90	4.90

1) Enter the phase & voltage code in the box (□) within the motor model name.
2) Enter the gear ratio in the box (□) within the Gearbox model name.
3) A colored background indicates gear shaft rotation in the same direction as the motor shaft; a white background indicates rotation in the opposite direction.
4) The rotating speed is calculated by dividing the motor's synchronous speed (50Hz: 1,500r/min, 60Hz: 1,800r/min) by the gear ratio.
The actual speed is 2~20% less than the displayed value, depending on the size of the load.

Dimensions

MOTOR ONLY

● MOTOR MODEL: 7SRDD□-15 (NO FAN)

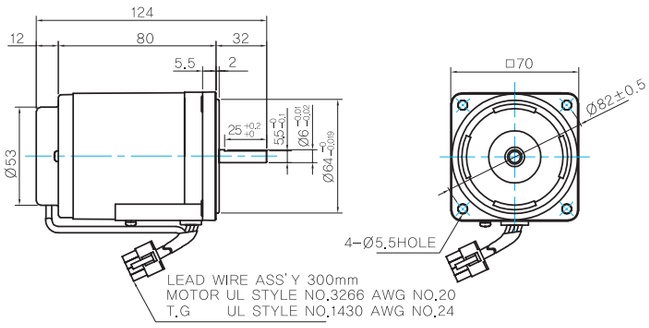

● MOTOR OUTPUT SHAFT

MODEL	SPEC
D-CUT TYPE	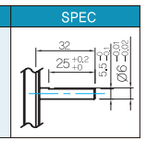

GEARED MOTOR

G TYPE GEARBOX

- MOTOR MODEL: 7SRDG□-15G (NO FAN)
- GEARBOX MODEL: 7GBK□BMH

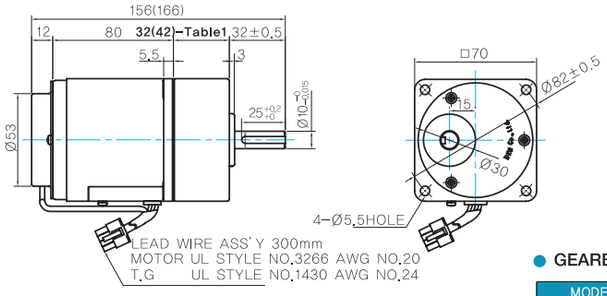

- GEARBOX OUTPUT SHAFT

MODEL	SPEC
KEY TYPE	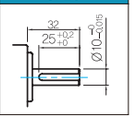

WEIGHT

PART		WEIGHT(Kg)
MOTOR		1.14
GEAR BOX	7GBK3BMH ~ 7GBK18BMH	0.36
	7GBK25BMH ~ 7GBK30BMH	0.44
	7GBK36MH ~ 7GBK180MH	0.5

- 32(42)-Table1

SIZE(mm)	GEAR RATIO
32	7GBK3BMH – 7GBK18BMH
42	7GBK25BMH – 7GBK180BMH

- KEY SPEC

MOTOR
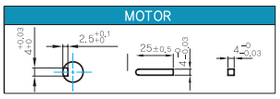

Motor Images

7SRDD□-15	7SRDG□-15G+7GBK□BMH